Goddard Space Flight Center's (GSFC) Mission Services Evolution Center (GMSEC) Architecture

11th Annual Enhancing Space Operations Workshop

A Middleware-based System Architecture for NASA/GSFC Missions
Based on Standardized Messages and Interfaces
And Utilizing COTS and GOTS Components

Jim Busch
jbusch@sgt-inc.com

John Bristow
John.O.Bristow@nasa.gov

gmsec@nasa.gov
http://gmsec.gsfc.nasa.gov

May 4, 2005

GMSEC Background

GMSEC was established in 2001 to coordinate ground and flight data systems development and services at GSFC

- Goals
  - Simplify integration and development
  - Facilitate technology infusion over time
  - Support evolving operational concepts
  - Allow growth of current and future GSFC missions
- Concepts
  - Standardize interfaces – not components
  - Provide a middleware infrastructure
  - Allow users to choose – GMSEC doesn't decide which components are best or dictate which components a mission must use. It's the mission/user's choice!

GMSEC Architecture

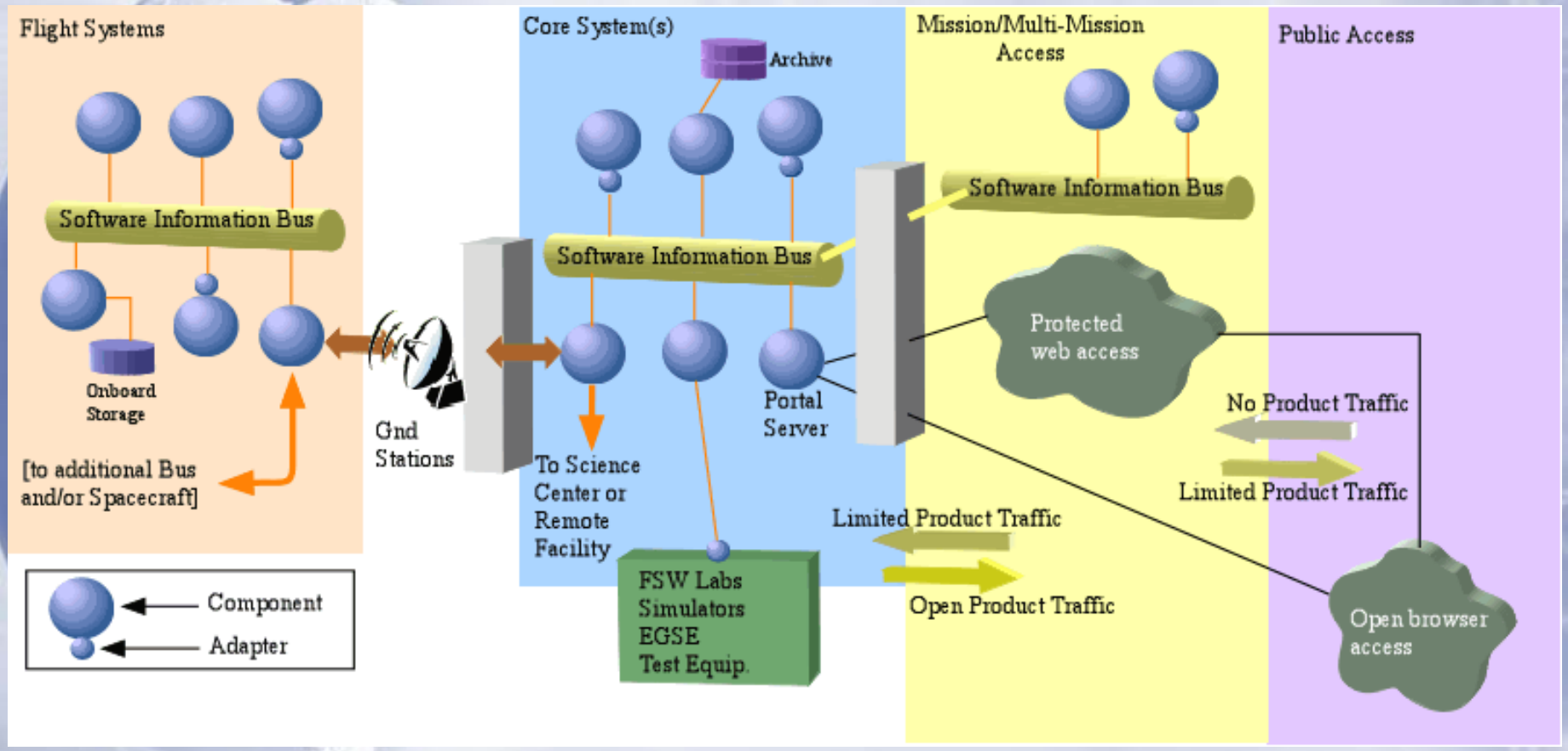

GMSEC Publish Subscribe Communication

Traditional Design
Socket Connections

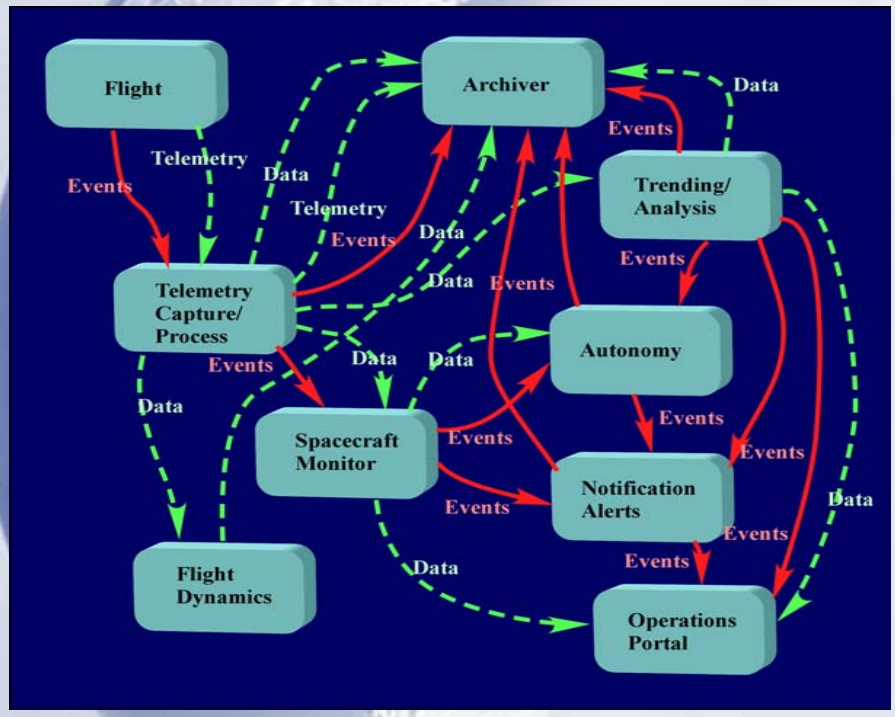

GMSEC Design
Middleware Connections

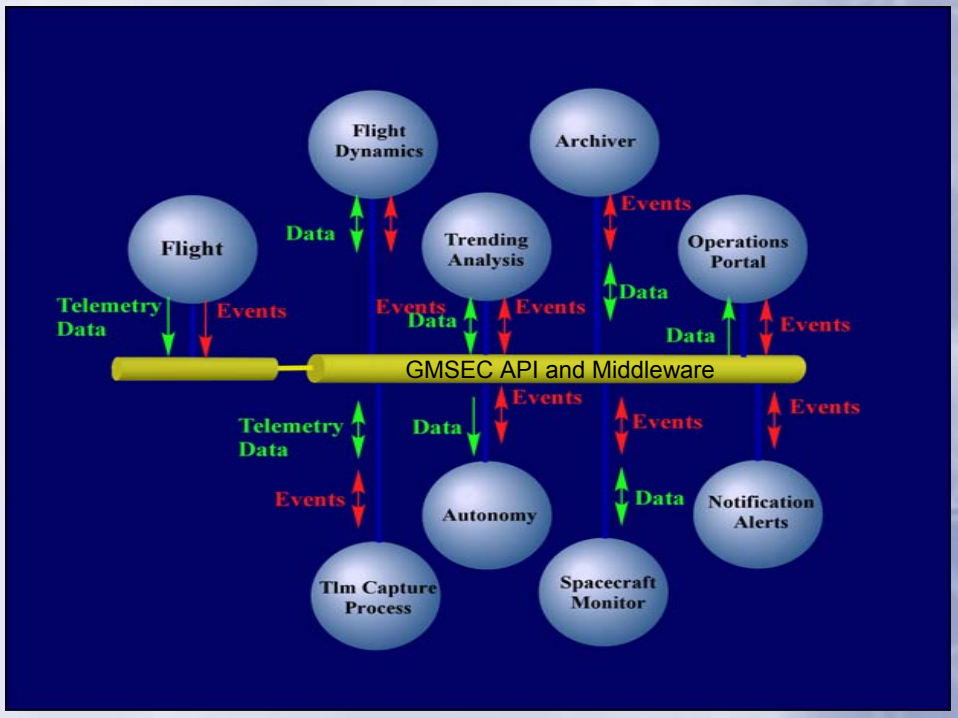

Middleware simplifies interfaces by reducing internal knowledge and coupling of components

Architecture Overview–Middleware

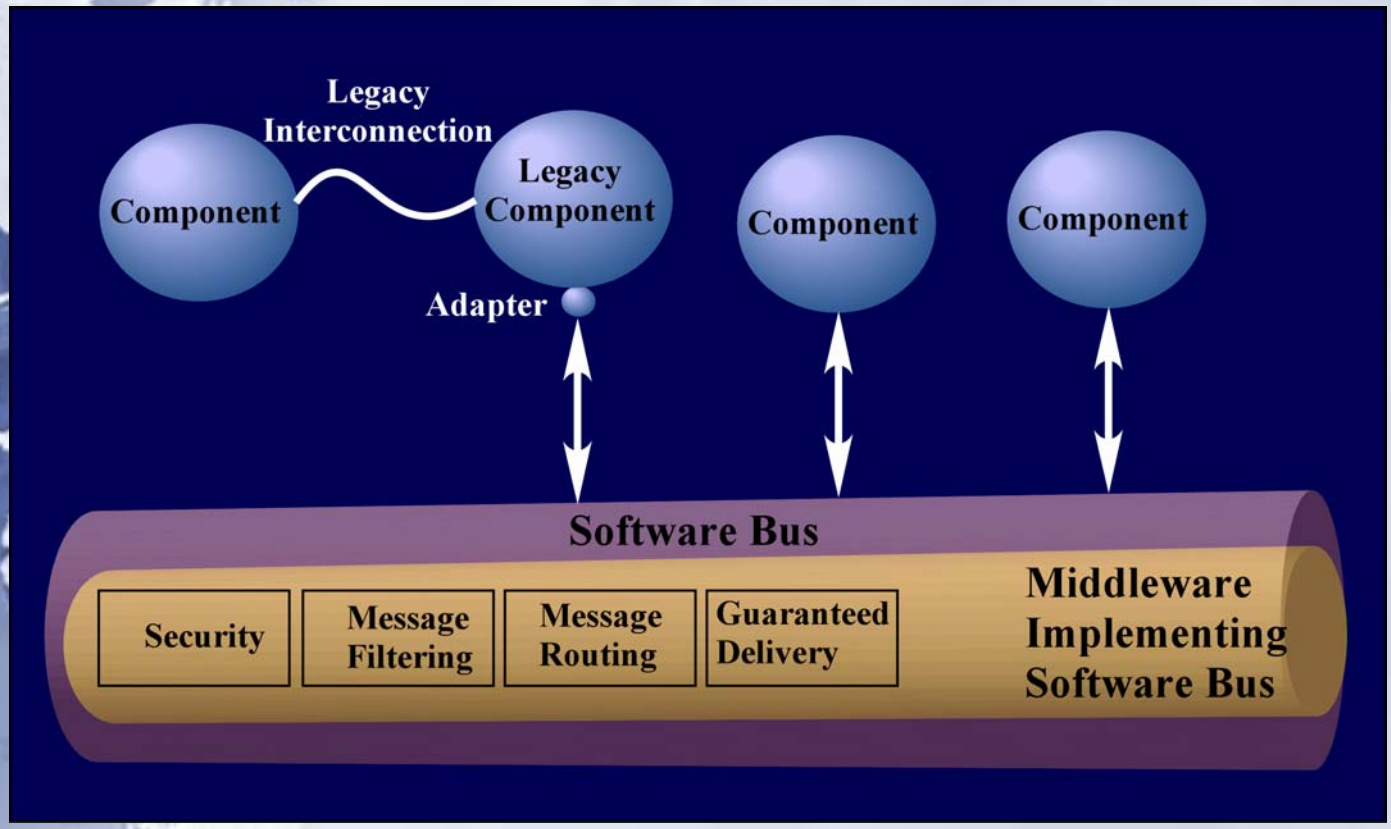

"Middleware manages the message flow between components"

Message Routing by Standard Subjects

	Mission Elements			Message Elements		*Miscellaneous Elements*			
Subject Elements	**System**	**Mission**	**Sat ID**	**Type**	**Subtype**	***me1***	***me2***	***me3***	***me4...***
	FIXED PORTION					***VARIABLE PORTION***			
	Required Elements					***Message definition determines whether a Miscellaneous element is required or optional***			

Example Heartbeat Subject:
GMSEC.TRMM.TRMM1.MSG.C2CX.SS.HB

Plug-and-Play Concept

By creating a "framework", individual applications can be easily integrated into an existing system without regard to many underlying implementation details.

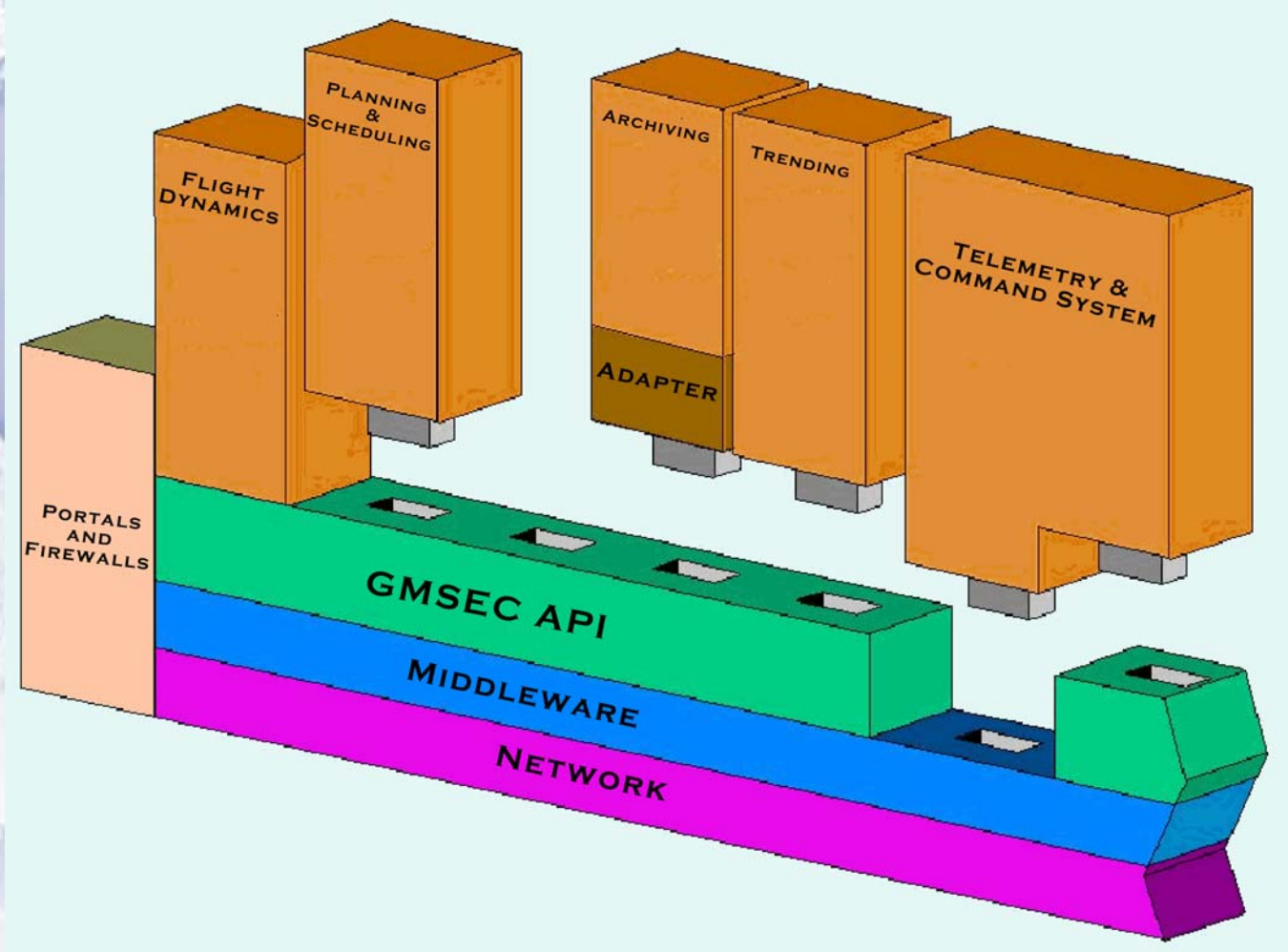

GMSEC Operational Status

- Dozens of components now available
- Automated test package for over 8,000 combinations including 3 platforms and 4 languages
- Full documentation set including GMSEC Architecture, User's Guide, System Description, Interface Specifications, Test Plans, Development Process and on-line API Documentation
- GMSEC Architecture Application Programming Interface (API)
  - Middleware Independent
    - Five middleware options including: TIBCO SmartSockets & Rendezvous, ICS SWB, GSFC Bus, WebSphere, SOAP
    - Middleware can be changed at runtime
  - Standard API + Data Types
  - Cross Platform API
    - Linux RH (7.1-7.3,9, + Enterprise), Suse (8.1)
    - Windows NT/2000/XP
    - Solaris (gcc + cc)
  - Multiple Languages
    - C, C++, Java, Perl, Python*, Delphi*

* These language versions not fully tested or supported

GMSEC Operational Status

Existing mission reengineering efforts

- Tropical Rainforest Measuring Mission (TRMM)
  - Goal: reduce operations cost by 50%
  - Operational Readiness Review (ORR) May 2005
  - Pathfinder for Terra, Aqua, Aura automation (2005-2006)
- Small Explorer (SMEX) missions – SWAS, WIRE, TRACE, SAMPEX
  - Pathfinder for low-cost fleet operations & updating existing space science missions
  - SWAS - ORR held April 29th; preparing for full SMEX ORR

New GSFC missions

- Discussions/planning: LRO, GLAST
- Sharing tools and approach: JWST
- Implementing: ST5
- Co-developing: MMS, GPM

Other applications

- Other NASA Centers and related facilities: GSFC/WFC, JPL, JHU/APL, MSFC, JSC, KSC
- GSFC Flight Dynamics Facility (FDF)
- Commercialization interest: Australian mining operations

GMSEC Component Menu

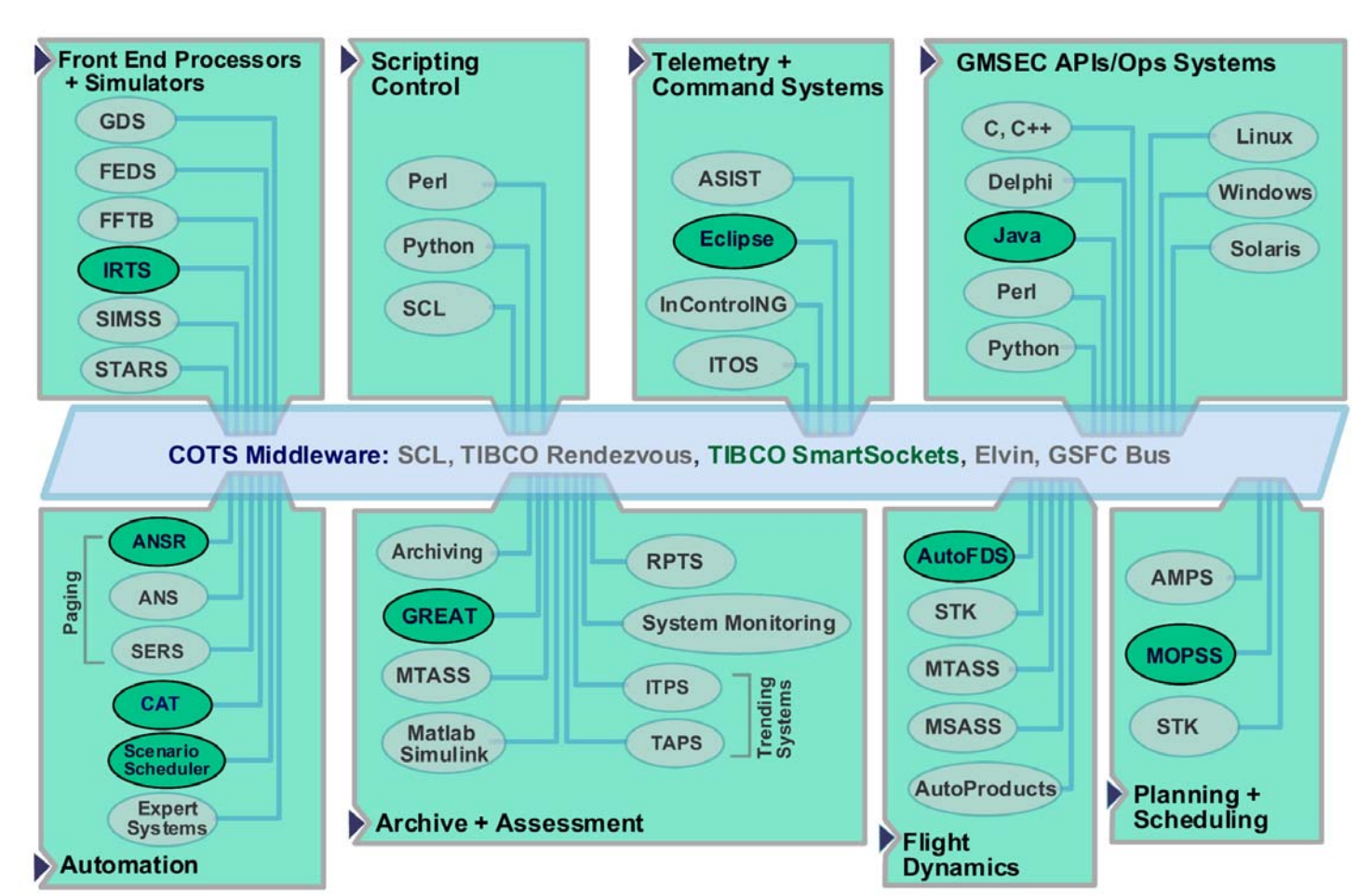

Choices are available for many subsystems. The TRMM mission selected catalog components to best meet their reengineering needs.

GMSEC System Example
TRMM Logical Architecture

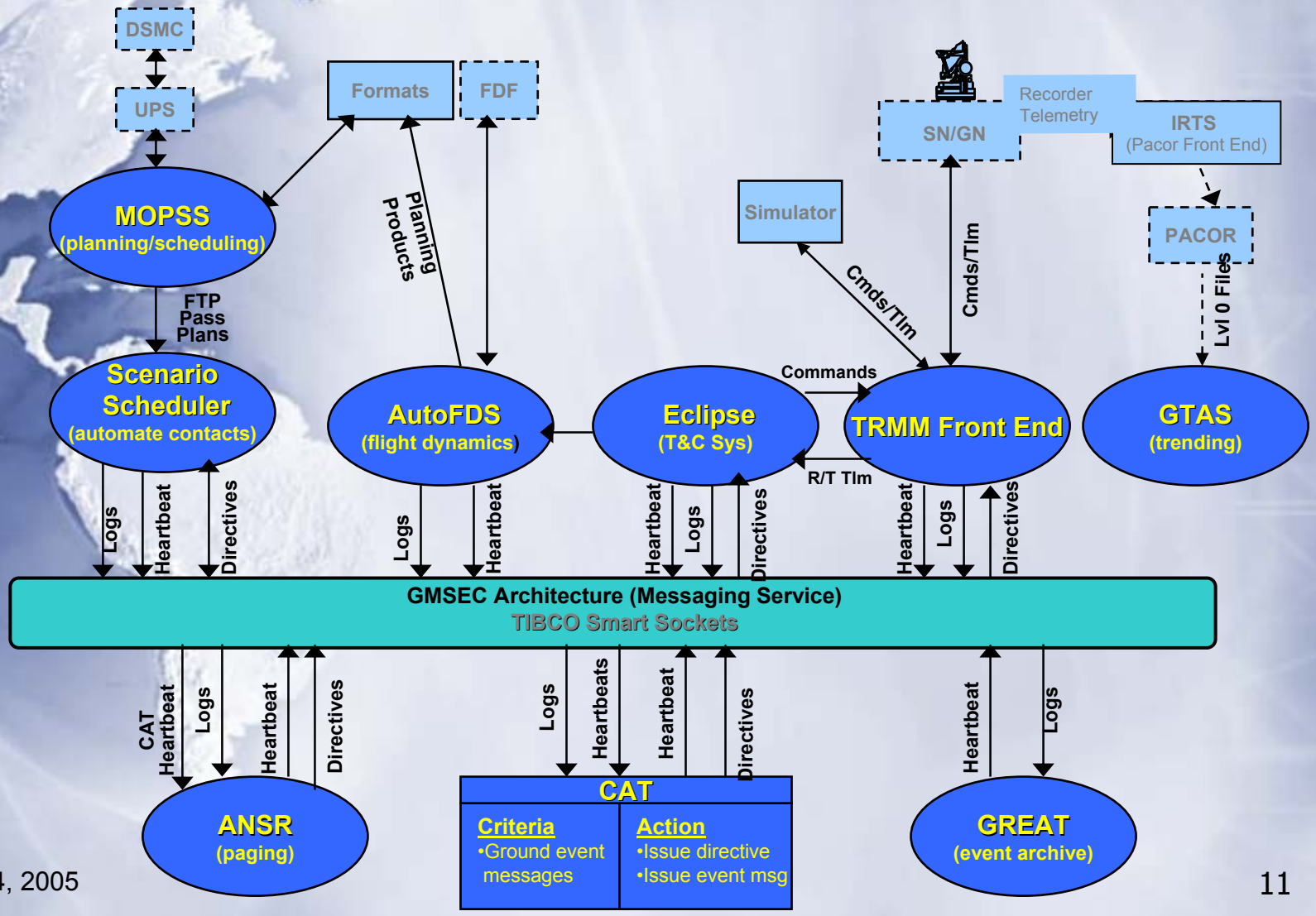

New Capabilities Enabled

System-Wide Automation

- Monitor bus traffic, take action based on defined rules
- Crosses boundaries of all component domains

Entire System Monitoring

- Subscribe to all bus traffic
- Graphically show bus loading by category

Configuration Display

- Monitor heartbeat messages and selective text messages
- Update graphical configuration display in real-time

Failovers

- Bus and component failover supported by middleware
- Socket connections automatically re-established transparent to component or user

Dynamic Bus-Based Configuration Display

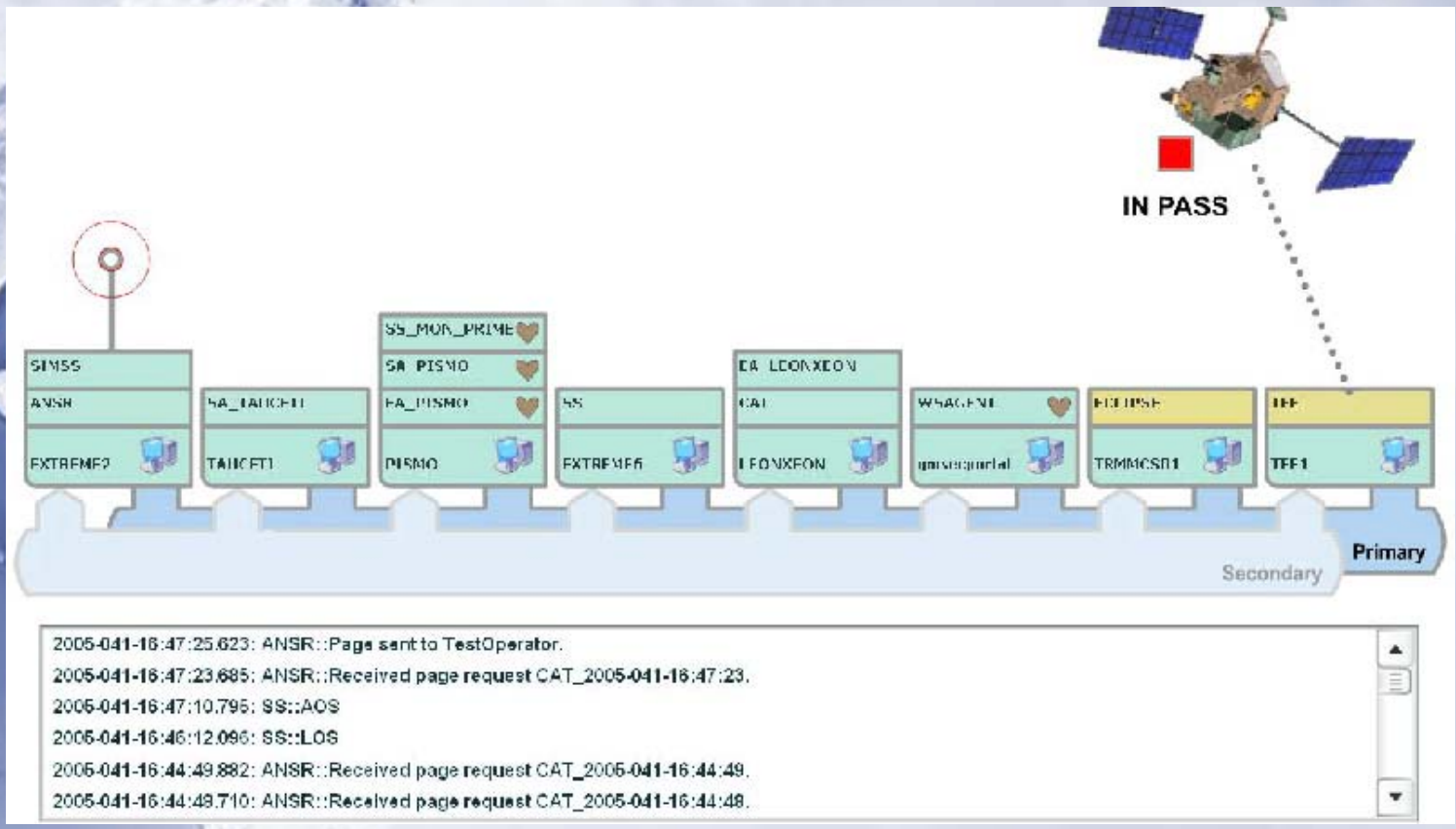

Tool subscribes to event messages and heartbeats. Different event messages trigger updates to the display to show start of data flows, pager notifications, software and processor failures, etc. Sound effects for key alarm conditions, failovers, etc. All done with message subscriptions, no integration directly with other components.

Observed Benefits

- Significant reduction in integration time
- Parallel testing and operations without impact to existing system
- Components added/upgraded without impacting existing system
- Ideal for using multiple small distributed development teams and vendors
- Several new concepts for small independent components that integrate with the bus and provide immediate benefits
- Missions more willing to adopt the approach if "old favorite" components can still be used
- Some vendors see message compliance as a way to enter what had appeared to be a closed marketplace
- Standard message approach provides collaboration possibilities with other organizations

GMSEC Lab Demonstration Operational Scenarios

- Flash-based Demonstrations:
  - Nominal Operations Scenario
    - Demonstrates TRMM's method for handling the automatic execution of procedures for spacecraft contacts through the use of the Scenario Scheduler automation tool
    - http://wags.gsfc.nasa.gov/gmsec/trmm/timer.swf
  - Out of Limits Event
    - Demonstrates TRMM's method for handling a spacecraft OOL event: message is routed to the Criteria Action Table (CAT) automation system, which then routes a message to the ANSR paging system to trigger a page
    - http://wags.gsfc.nasa.gov/gmsec/trmm/red.swf
  - GMSEC Middleware Failover
    - Demonstrates TRMM's method for handling a GMSEC middleware server failure and failover to the back-up server with automatic component failover to the back-up
    - http://wags.gsfc.nasa.gov/gmsec/trmm/failover.swf

Acronym List

API - Application Programming Interface
COTS - Commercial Off The Shelf
GLAST - Gamma-ray Large Area Space Telescope
GMSEC - Goddard Mission Services Evolution Center
GOTS - Government Off The Shelf
GPM - Global Precipitation Measurement
GSFC - Goddard Space Flight Center
ICS SWB - Interface & Control Systems Software Bus
JPL - Jet Propulsion Laboratory
JHU/APL - Johns Hopkins University/Applied Physics Lab
JSC - Johnson Space Center
JWST - James Webb Space Telescope
KSC - Kennedy Space Center
LRO - Lunar Reconnaissance Orbiter
MMS - Magnetospheric MultiScale Mission
MSFC - Marshall Space Flight Center
ORR - Operational Readiness Review
SAMPEX - Solar Anomalous and Magnetospheric Particle Explorer
SMEX - Small Explorer
SOAP - Simple Object Access Protocol
ST-5 - Space Technology 5
SWAS - Submillimeter Wave Astronomy Satellite
TRACE - Transition Region and Coronal Explorer
TRMM - Tropical Rainforest Measuring Mission
WFF - Wallops Flight Facility
WIRE - Wide-Field Infrared Explorer

Component List

AMPS - Automated Mission Planning & Scheduling
ANS - Alert Notification System
ANSR - Alert Notification System Router
ASIST - Advanced Spacecraft Integration and System Test
AutoFDS - Autonomous Flight Dynamics System
CAT - Criteria Action Table
EGSE - Electronic Ground Support Equipment
FEDS - Front End Data System
FDF - Flight Dynamics Facility
FFTB - Formation Flying Test Bed
FSW - Flight Software
GDS - Goddard Dynamic Simulator
GREAT - GMSEC
IRTS - ISTP Real-time Software Front End
ITOS - Integrated Test and Operations System
ITPS - Integrated Trending and Plotting System
MOPSS - Mission Operations Planning and Scheduling System
MSASS - Multi-Mission Spin Axis Stabilized
MTASS - Multi-Mission Three-Axis Stabilized Spacecraft
SIMSS - Scalable, Integrated Multi-mission Simulation Suite
STARS - Spacecraft Trajectory and Attitude Real-Time Simulator
STK - Analytical Graphics Satellite Toolkit
SERS - Spacecraft Emergency Response System
TAPS - Trending, Analysis, and Plotting System

BACKUP SLIDES

TRMM Project Background

- The primary objective for re-engineering the TRMM ground system was to reduce operations costs by 50% by the end of calendar year 2004
- Our approach is to introduce automation into the Control Center, which will allow for "lights-out" operations
- The GMSEC message-oriented architecture will be implemented
  - Ground components have adapted their software to the GMSEC architecture to support the standard interface and message formats
- GMSEC enables ground system components to use a common interface to publish and subscribe to messages and data on a middleware software "bus"
- This facilitates a low cost automation solution by enabling components to easily communicate with each other, eliminating costly socket connection development costs
- TRMM will implement simple ground automation using FOT configurable automation tools developed and provided by GMSEC

GMSEC EOS Upgrade Schedule

- The re-engineered TRMM ground system moved to the MOC in October 2004 for testing and parallel operations
- TRMM Parallel operations started in *December 2004* and the new GMSEC ground system will be operational end of May
- Future plans for EOS missions include reuse of the TRMM architecture for the Terra, Aqua, and Aura missions
  - Terra automation - *April 2005 to Dec 2005*
  - Aqua/Aura automation - *2006*

GMSEC SDO Demo Architecture

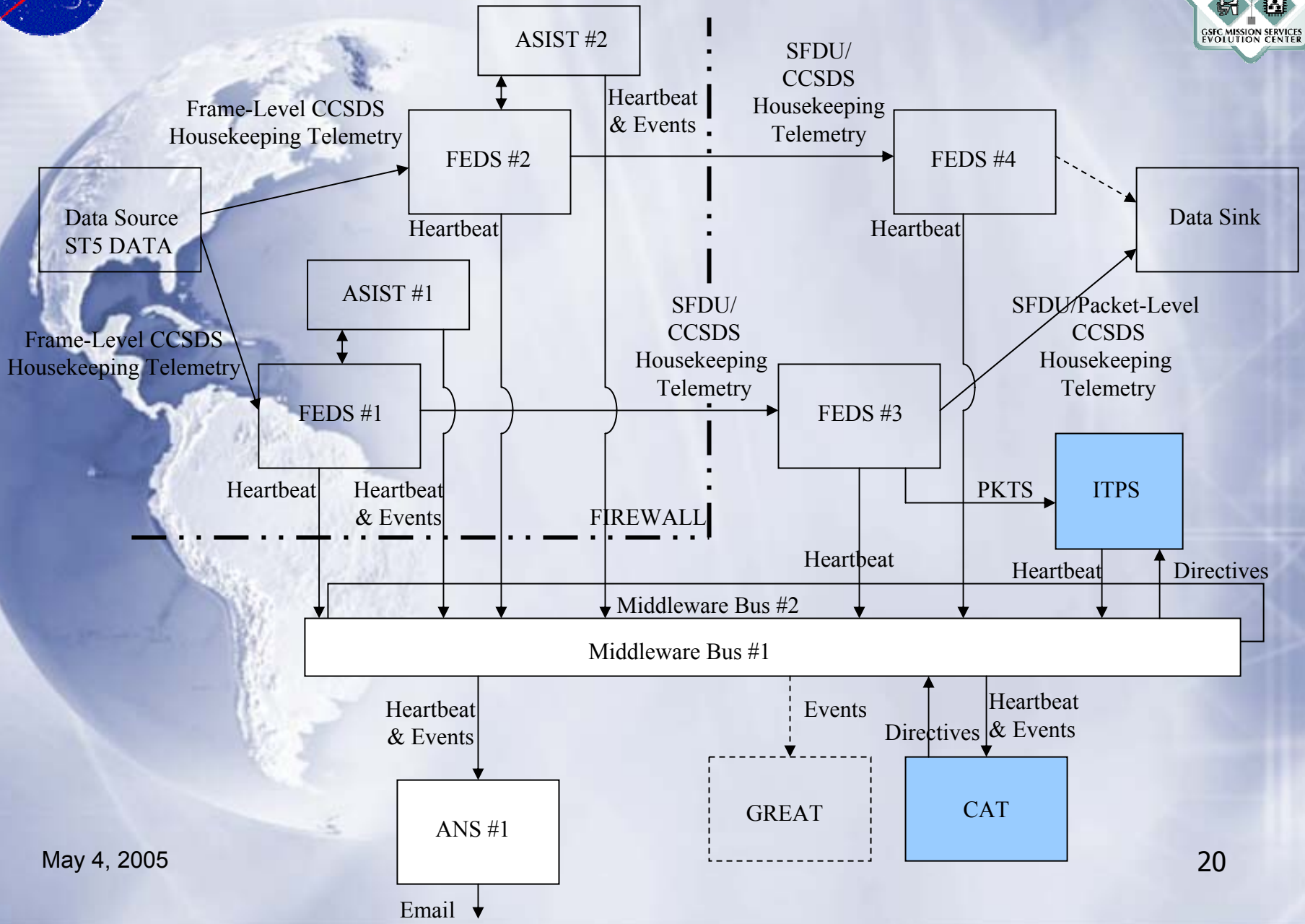
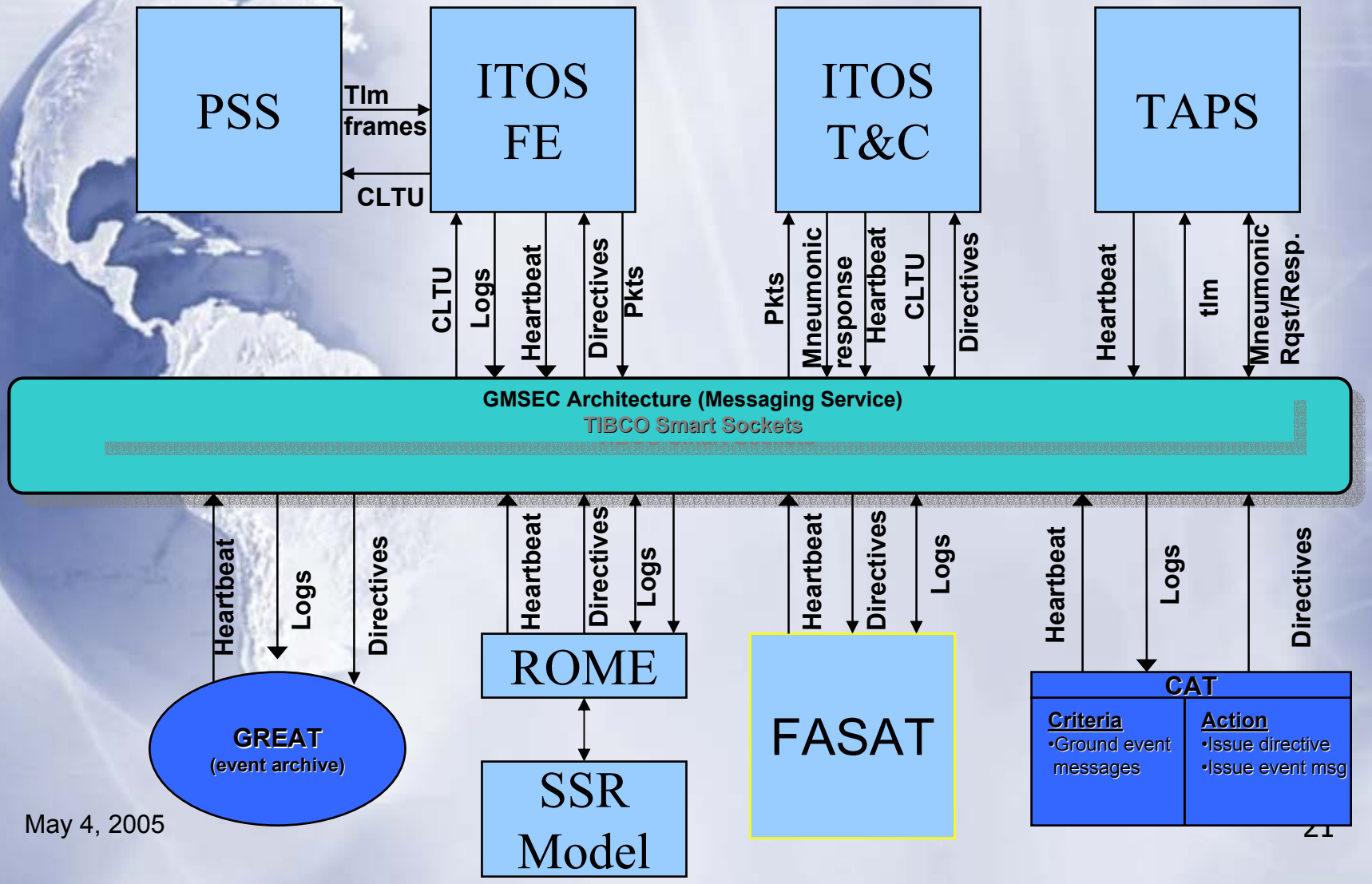
GLAST/GMSEC Prototype Architecture