Virtual Feel Sensor

John Vranish
Vladimir Lumelsky
Jesse Clark
Ryan Boller
Aimee Joshua

Exploration Mission Needs

- In a remote robot repair mission, if a robot were to jam a tool, this could prove catastrophic. Current methods do not prevent this possibility. A remote operator would be helpless maneuvering the tool without additional information.

- "Virtual feel" (proven in *ROMPS, Robot Operated Materials Processing System*) uses Capaciflector sensors. Its purpose is to provide the human operator (or a computer, in autonomous mode) with information critical for tool alignment.

- If successful, the results will be useful to the HST Robotic Servicing and Exploration missions.

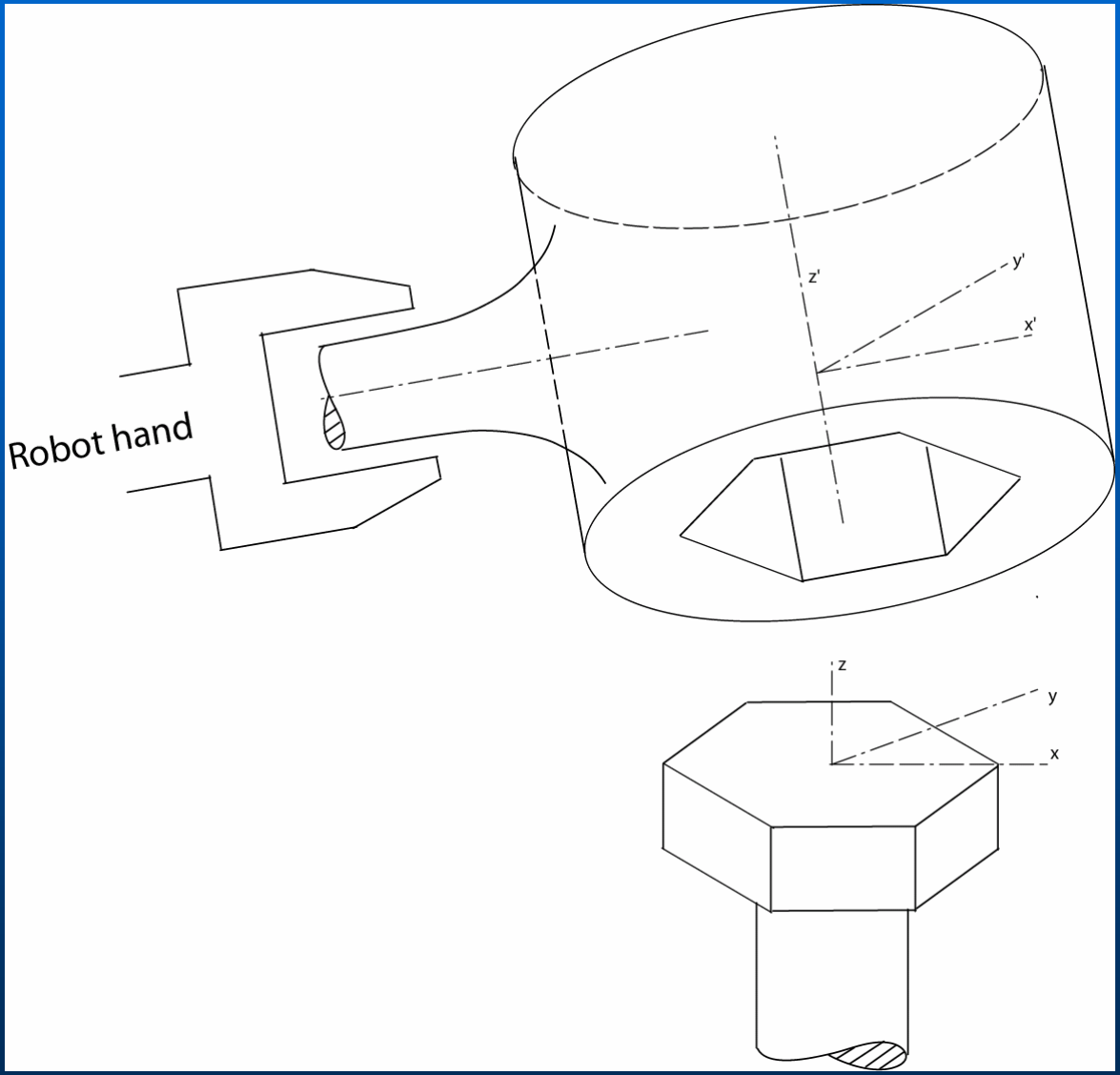
Robot hand
z'
y'
x'
z
y
x

“Virtual Feel” Concept

“Virtual feel” is a means for non-contact proximity sensing. The technique involves inferring the parts’ mutual misalignment by analyzing the capacitance profile.

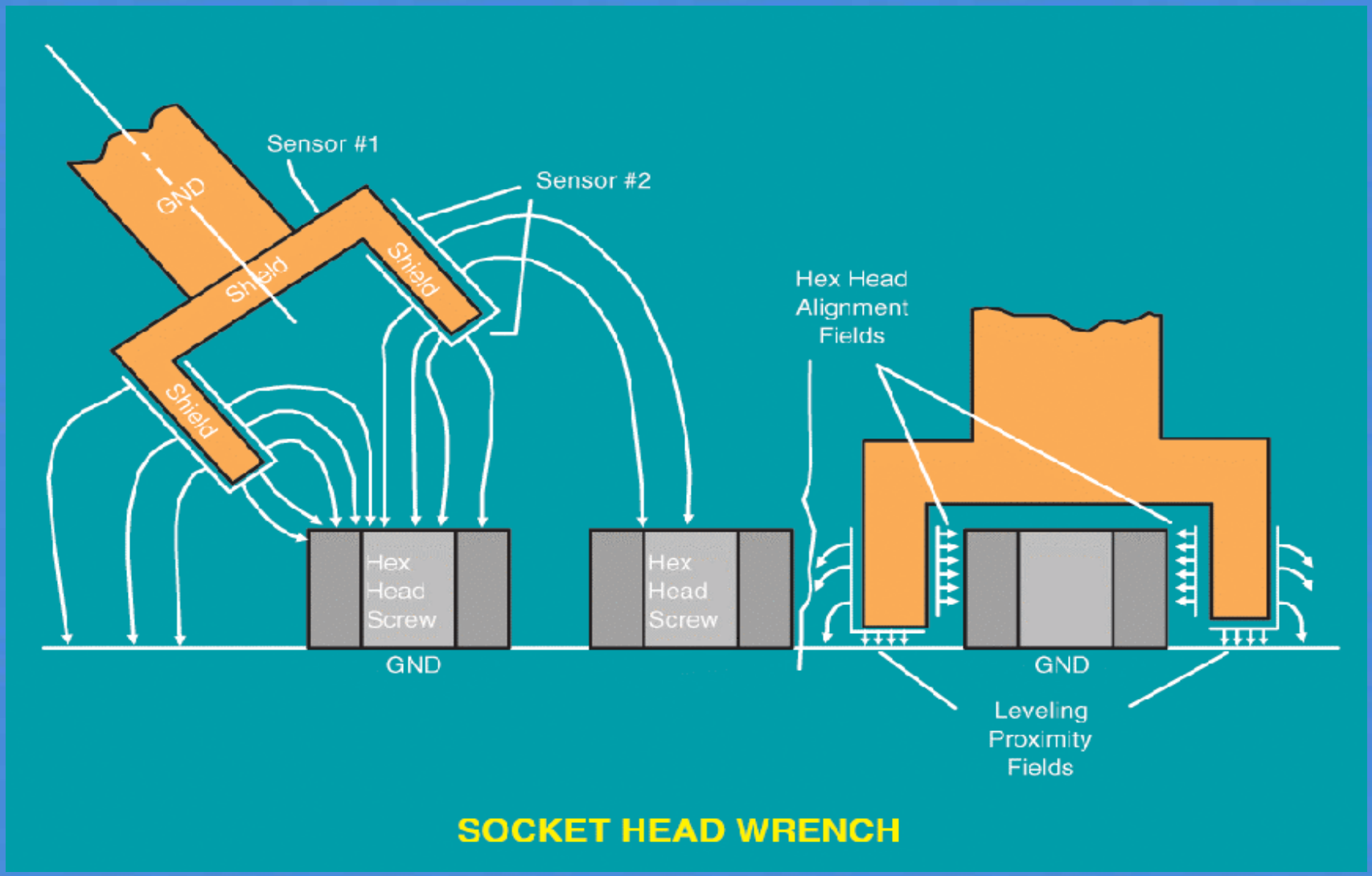

Approach

- We will build upon existing Capaciflector technology.

- "Virtual feel" software will cover these functions:
  - 3-D scene reconstruction (when cameras are of no help)
  - Automatic control to search, align, and insert the tool
  - Automatic recovery capability
  - Simulation mode

- *Risks:*
  - Hardware: feasibility of desired resolution? Number of sensors?
  - Software: algorithms for analysis of site's geometry?

Overall scheme – Stage 1

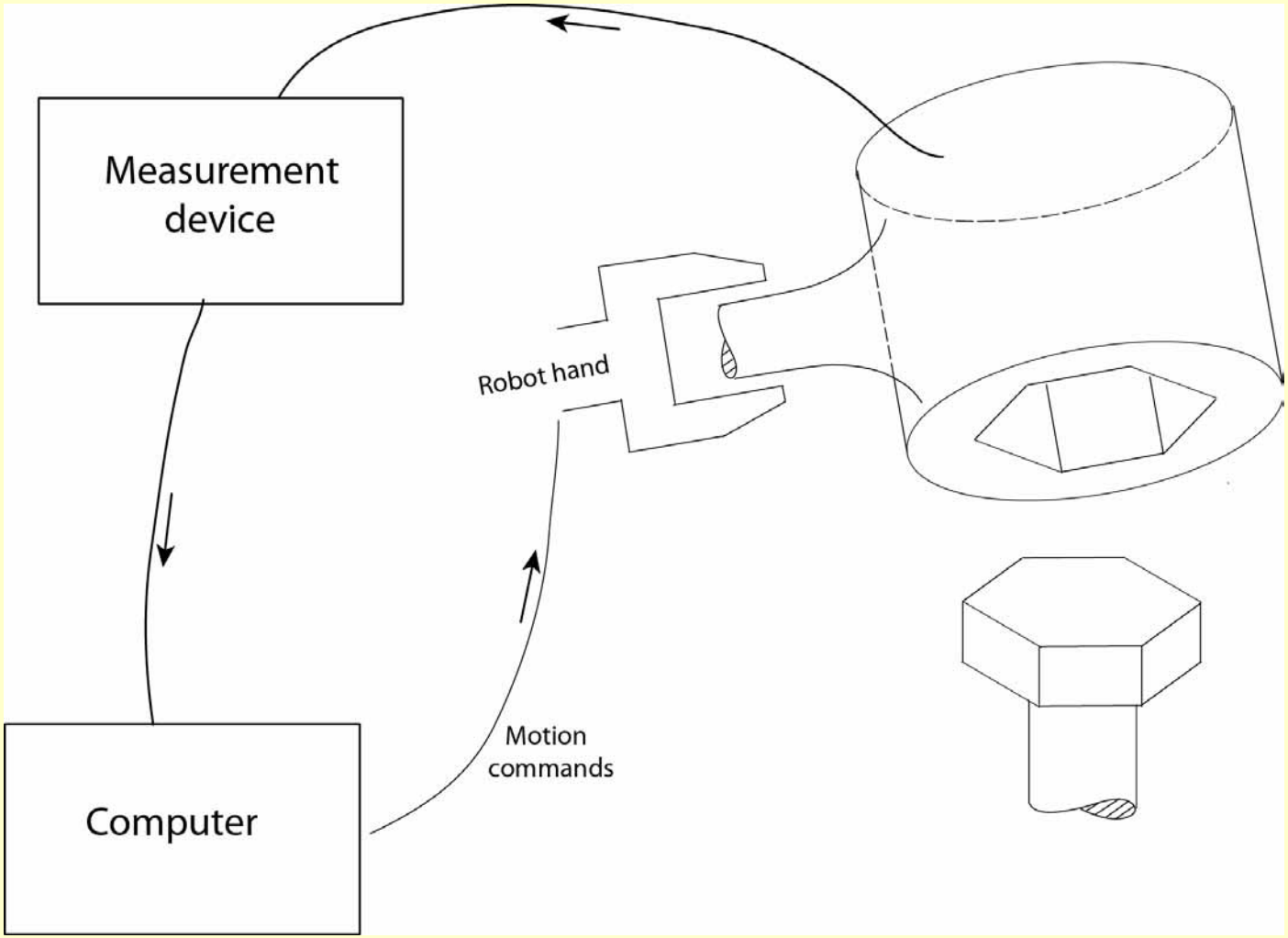

Summary

- Precision assembly and disassembly is fundamental to robotic servicing operations, both in low earth orbit and on a planetary surface.

- This is an attempt on the next generation technology building upon the success of Capaciflector (8+ patents; the Hubble COS instrument is already using Capaciflector for precision servicing).