Space Network & Cisco Router

Code 582 / Jane Marquart

The Information Systems Division

Objective

- Develop inter-operable space network using CCSDS SOIS architecture
  - **CCSDS standardization of flight networks will enable interoperable space hardware components**
  - **Provide a single solution to eliminate duplication of effort between missions**
  - **Portable applications**

SOIS Architecture: example

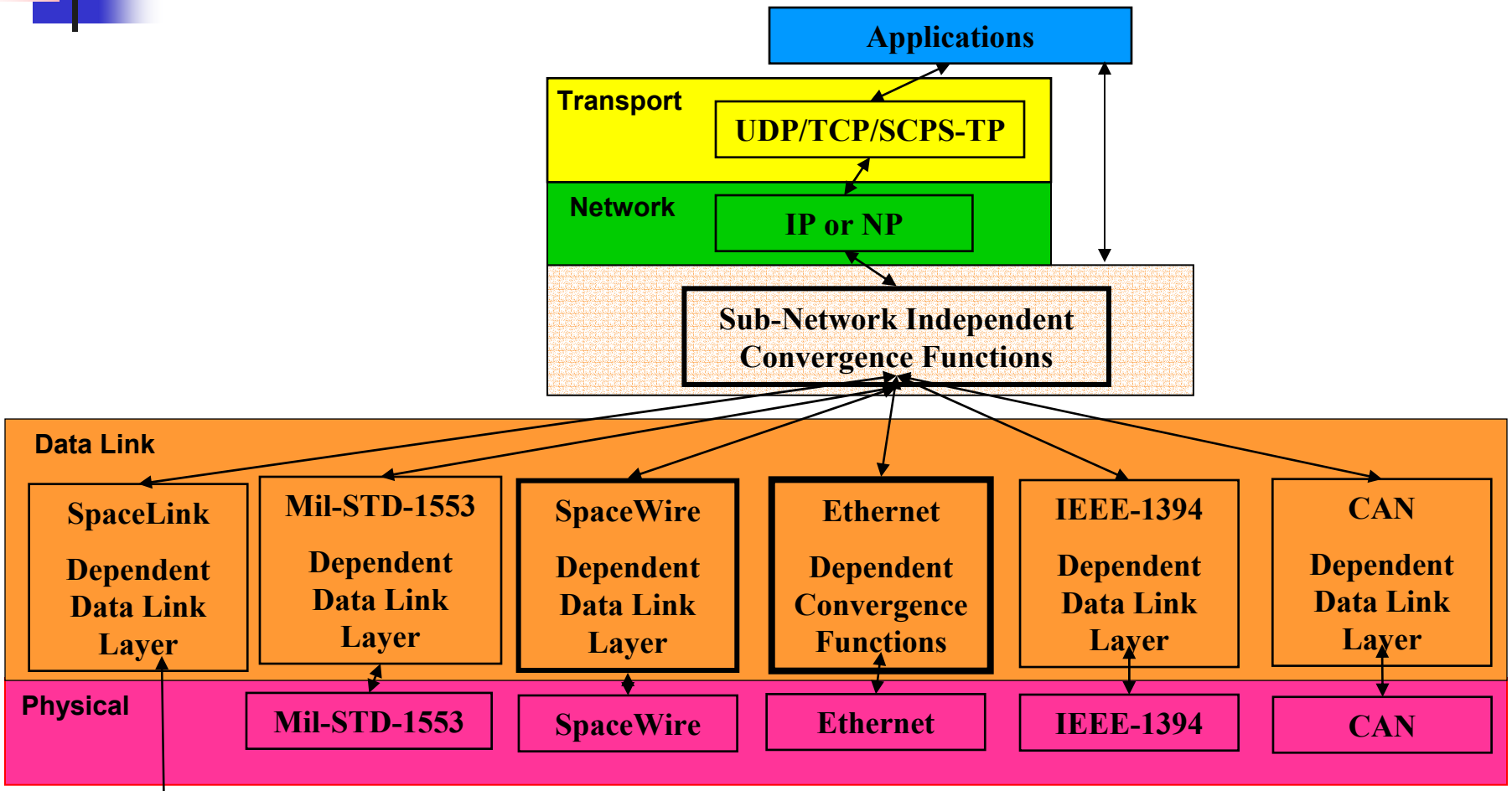

SOIS Implementation Model

- Abstracts underlying transport mechanism; applications do not need to know underlying bus
- Same functionality/interface provided for all busses
- Includes a "convergence" layer
  - Provides standard interface to transport/network
  - Provides standard set of functionality (independent)
  - Includes data link specific software (dependent)

Onboard Ethernet Network Model

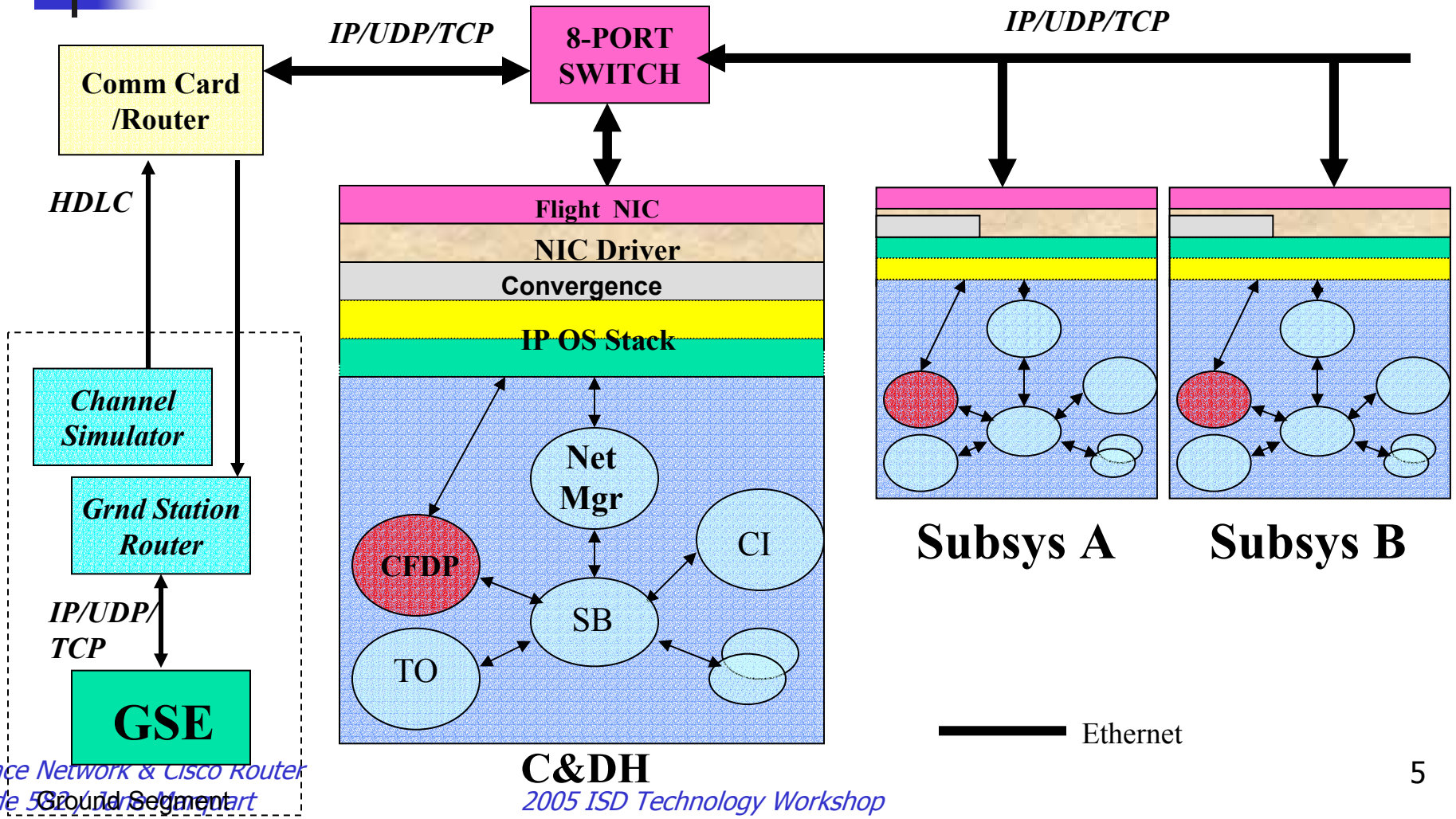

Onboard Ethernet Network Model

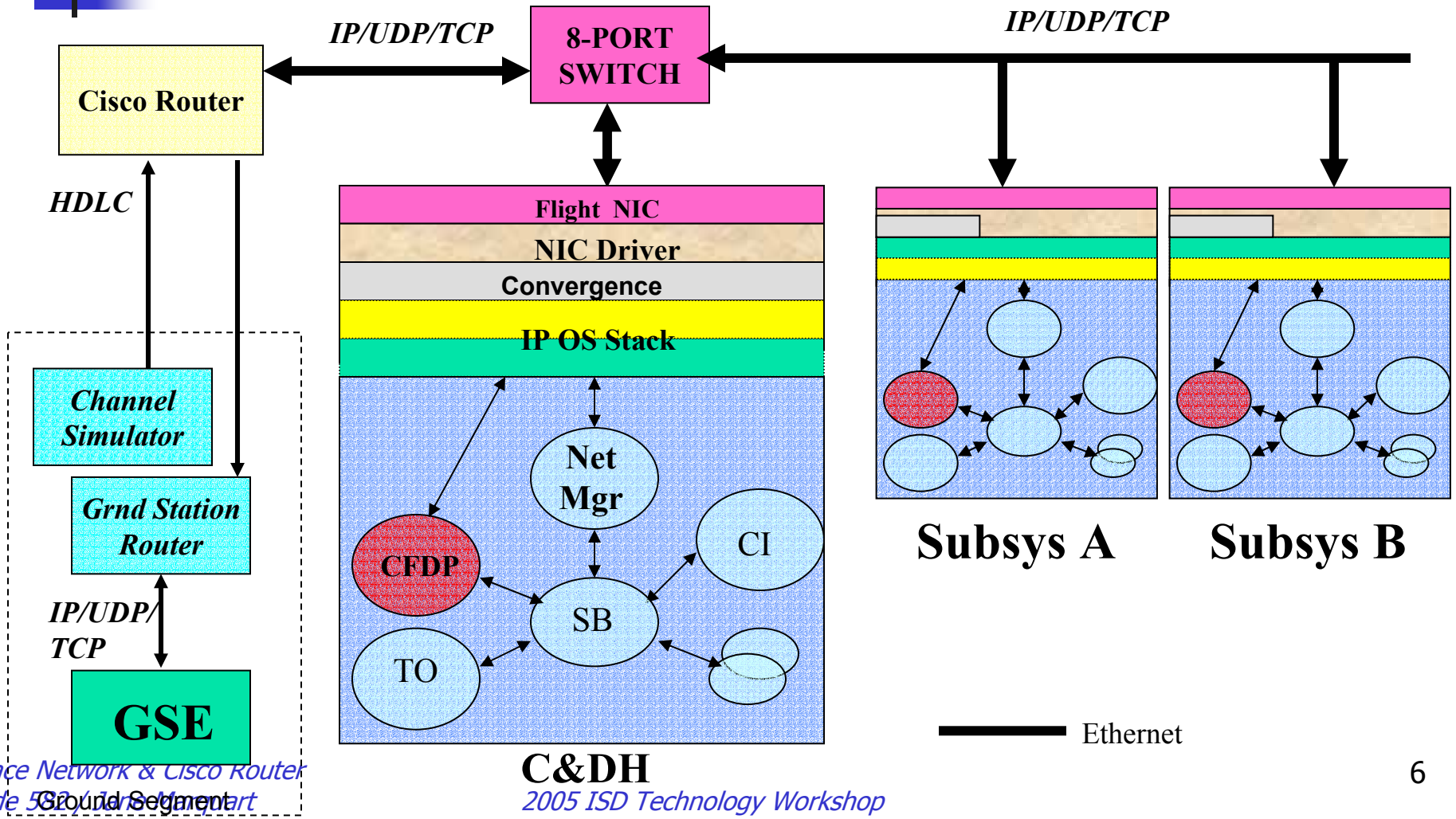

Approach - SpaceWire

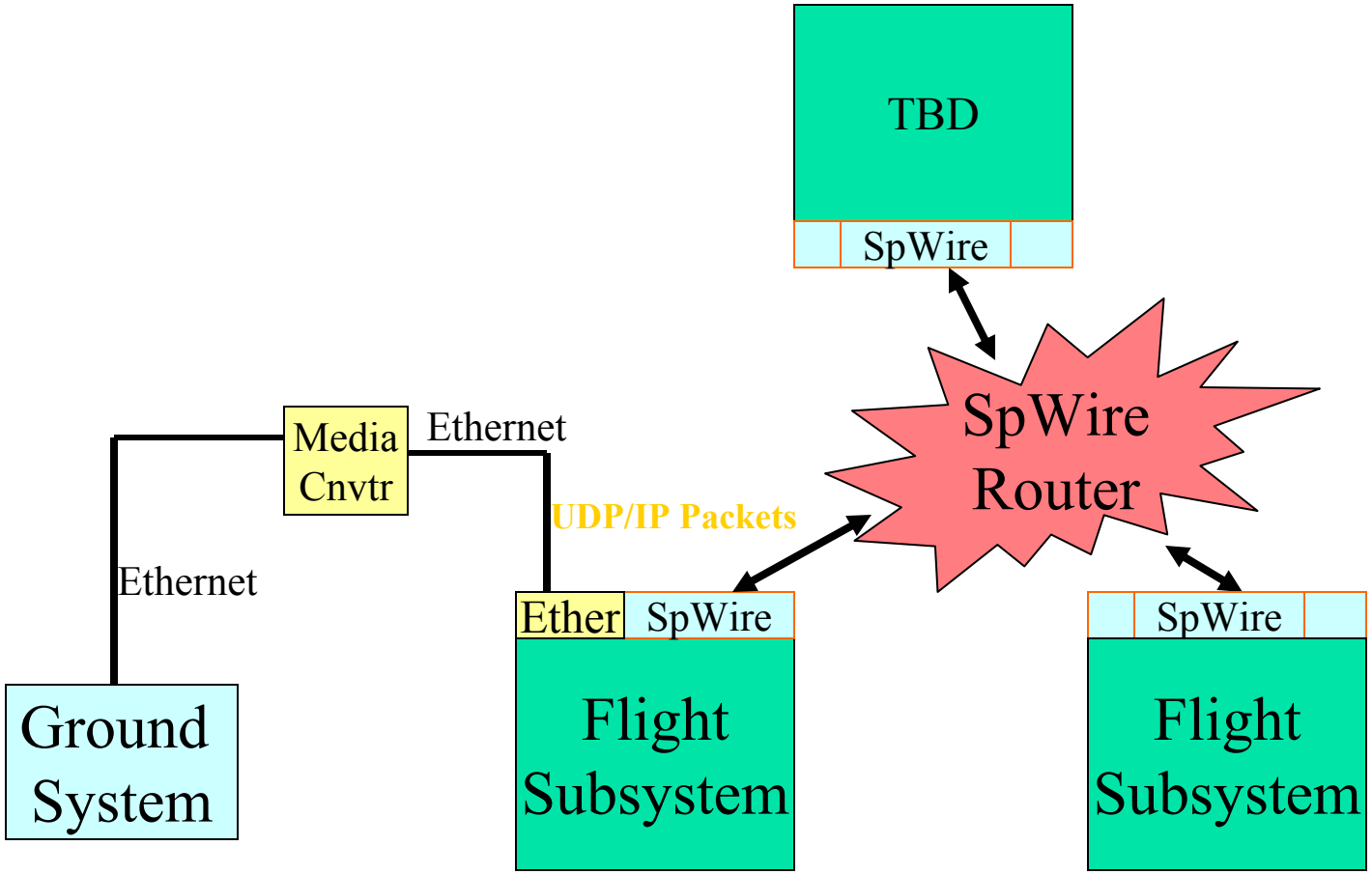

Future Work

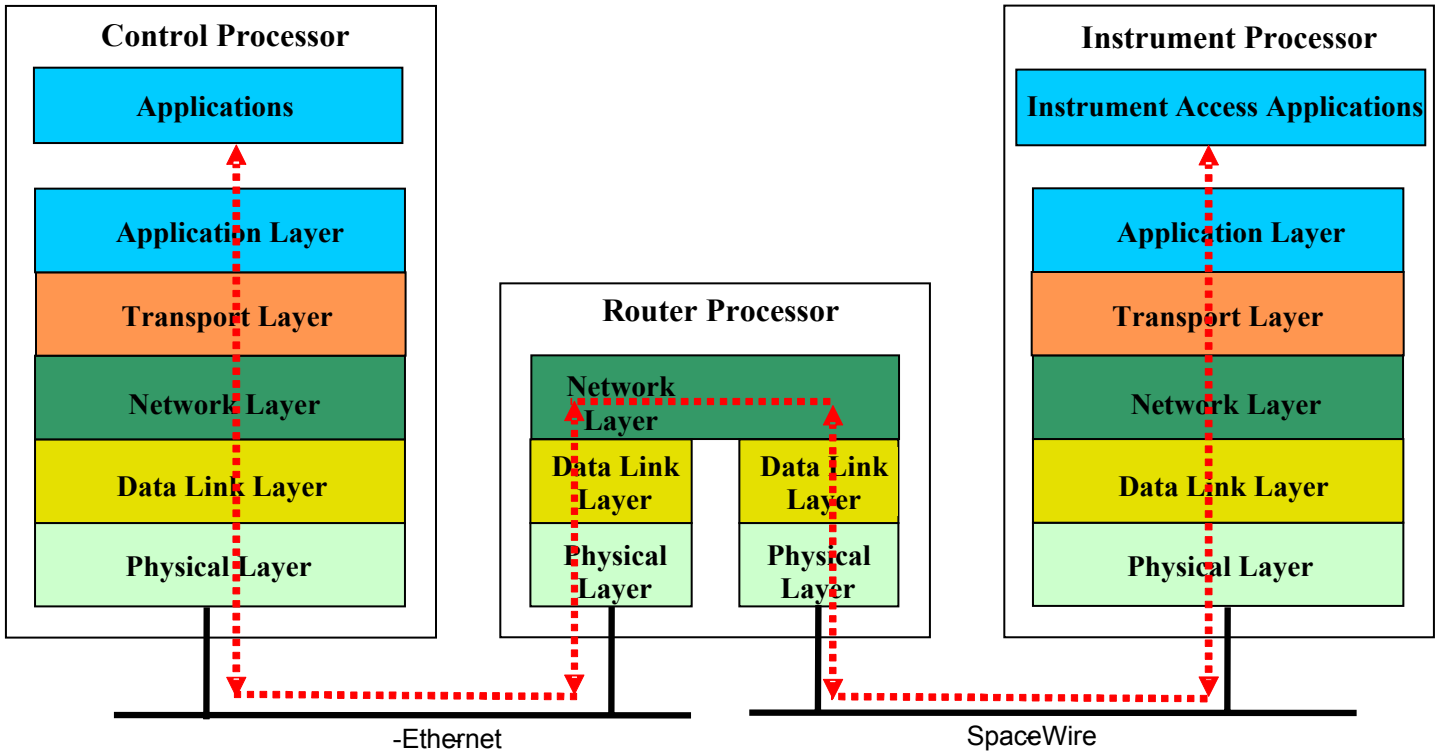
Control Processor
Applications
Application Layer
Transport Layer
Network Layer
Data Link Layer
Physical Layer
Router Processor
Network Layer
Data Link Layer
Physical Layer
Data Link Layer
Physical Layer
Instrument Processor
Instrument Access Applications
Application Layer
Transport Layer
Network Layer
Data Link Layer
Physical Layer
-Ethernet
SpaceWire

Future Work

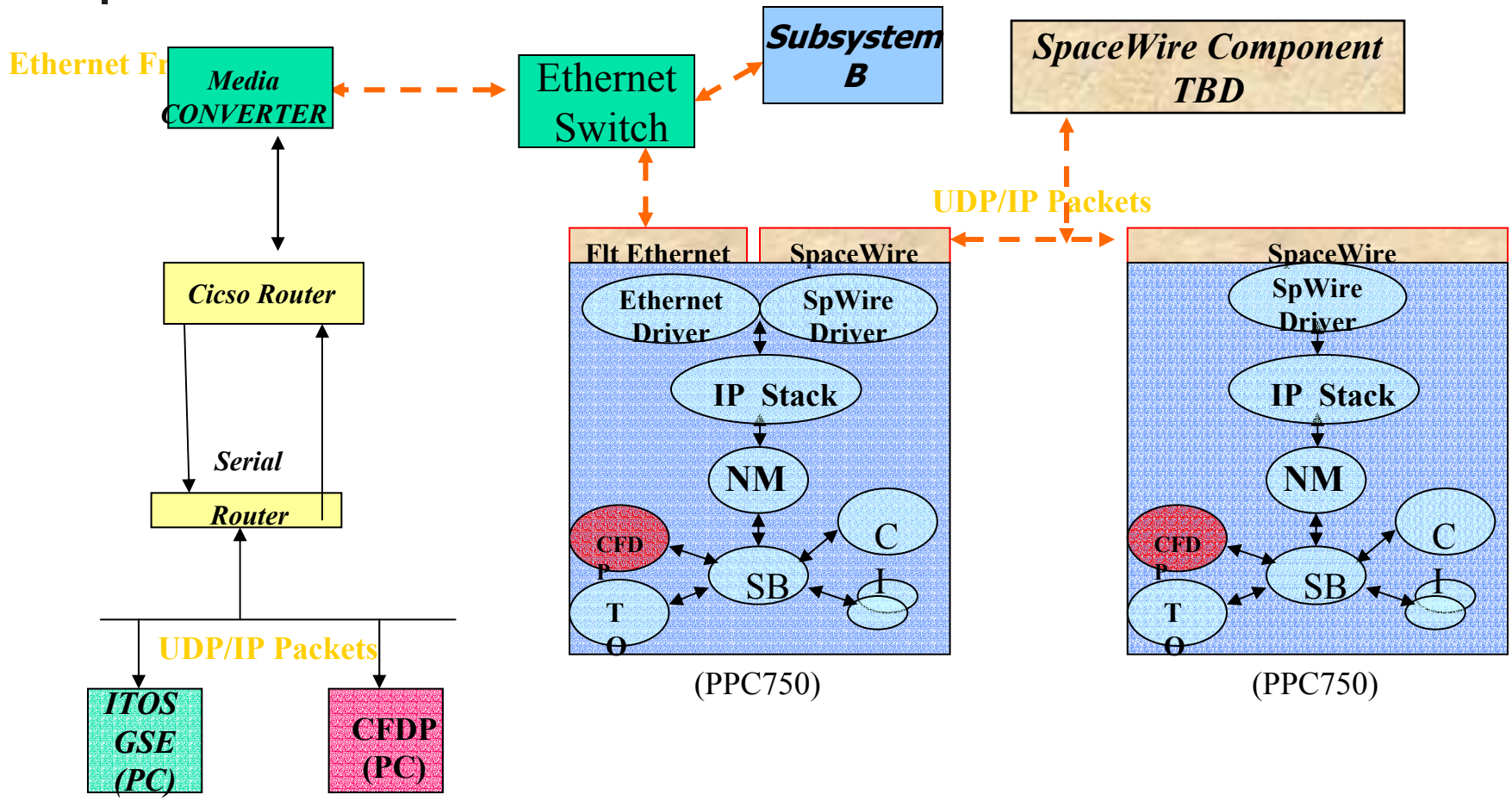
Ethernet Fr
Media CONVERTER
Ethernet Switch
Subsystem B
SpaceWire Component TBD
UDP/IP Packets
Cicso Router
Serial
Router
UDP/IP Packets
ITOS GSE (PC)
CFDP (PC)
Flt Ethernet
SpaceWire
Ethernet Driver
SpWire Driver
IP Stack
NM
CFDP
SB
C
I
T
O
(PPC750)
SpaceWire
SpWire Driver
IP Stack
NM
CFDP
SB
C
I
T
O
(PPC750)